400 CRAWLER SERIES

TELESCOPIC BOOM LIFTS

Performance

Platform Height		
400SC	39 ft 6.5 in.	12.05 m
460SJC	45.54 ft	13.88 m
Horizontal Outreach		
400SC	33 ft	10.00 m
460SJC	39 ft	12.00 m
Swing	360 Degrees Continuous	
Platform Capacity		
Restricted (400SC only)	1,000 lb	454 kg
Unrestricted	600 lb	272 kg
Platform Rotator	180 Degrees Hydraulic	
Jib (460SJC only)		
Range of Articulation	6 ft 130 Degrees (+70, -60)	1.83 m
Weight*		
400SC	14,559 lb	6,603 kg
460SJC	17,998 lb	8,164kg
Max. Ground Bearing Pressure		
400SC	5.21 psi	3,666 kg/m^2
460SJC	8.35 psi	5,870 kg/m^2
Drive Speed	1.8 mph	2.9 km/h
Gradeability	51%	
Turning Radius	Zero	
Type of Tracks	Rubber	
Track Width	1.31 ft	0.4 m

*Certain options or county standards may increase weight.

Standard Specifications

Power Source

Diesel Engine		
Deutz D2.9L4 Tier 4 Final	49 hp	36.4 kW
Fuel Tank Capacity		
400SC	22 gal.	83.3 L
460SJC	31 gal.	117 L

Hydraulic Reservoir

• Hydraulic Reservoir	36 gal	136.27 L
• Auxiliary Power	12V-DC	

Tracks

• Standard	Rubber
• Optional	Non-marking Rubber Steel Steel with Rubber Pads

Standard Features

- 180 Degree Hydraulic Platform Rotator
- Platform Console Machine Status Light Panel*
- 110V-AC Receptacle in the Platform
- 5 Degree Tilt Alarm/Indicator Light
- Swing Out Engine Tray
- 12V-DC Auxiliary Power
- Hourmeter
- Improved Multi-Function Controls
- Proportional Controls
- Interactive Display at Ground Controls
- Control ADE® System
- Lifting/Tie Down Lugs
- Horn
- All Motion Alarm
- Glow Plugs
- 36 x 96 in. (0.91 x 2.44 m) Platform
- SkyGuard SkyLine™
- Load Sensing System

*Provides indicator lights at platform control console for system distress, low fuel, 5 degree tilt light, and footswitch status.

Accessories & Options

- Inward Self-Closing Swing Gate
- 36 x 72 in. (0.91 x 1.83 m) Platform
- Fall Arrest Platform 36 x 72 in. (0.91 x 1.83 m)
- 1/2 in. Air Line to Platform
- Soft Touch System
- SkySense™
- AC Generator
- Flashing Amber Beacon
- Cold Weather Kit[1]
- Arctic Package[2]
- Hostile Environment Kit[3]
- Light Package[4]
- Special Hydraulic Oils (consult factory)
- Operator Tool Tray
- Accessory Packages
  - SkyPower® Package
  - SkyWelder® Package

Note: Some options may increase lead time, and some option combinations may not be available.

1. Includes engine block heater, battery heater and oil tank heater.
2. Includes arctic hydraulic hoses (drive and steer only) and main boom cable, arctic hydraulic oil, extreme cold engine oil, anti-freeze, fuel conditioner, engine block heater, battery blanket, glow plugs, hydraulic tank heater and oversized footswitch.
3. Includes console cover, boom wipers and cylinder bellows.
4. Includes platform work lights, head and tail lights, amber beacon.

Additional accessories and options available via JLG Aftermarket.

400 CRAWLER SERIES

TELESCOPIC BOOM LIFTS

Dimensions

All dimensions are approximate.

400SC

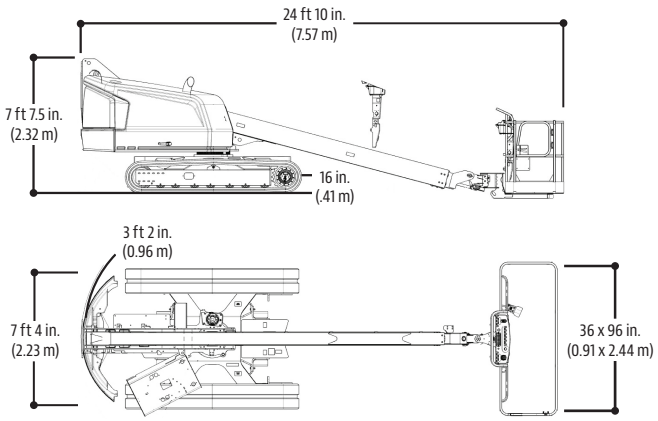

460SJC

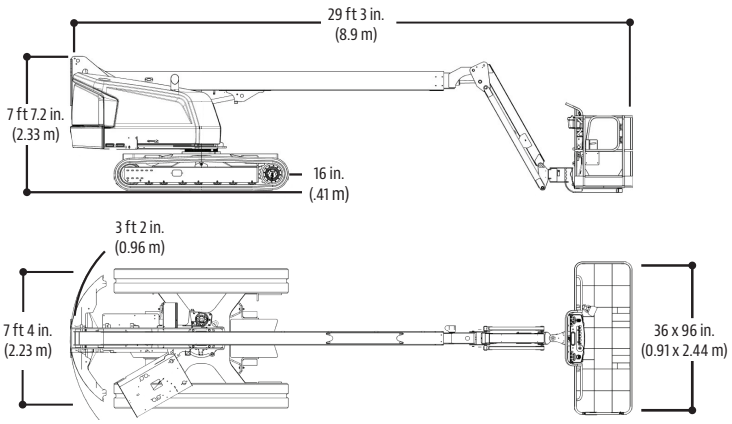

Reach Diagrams

400SC

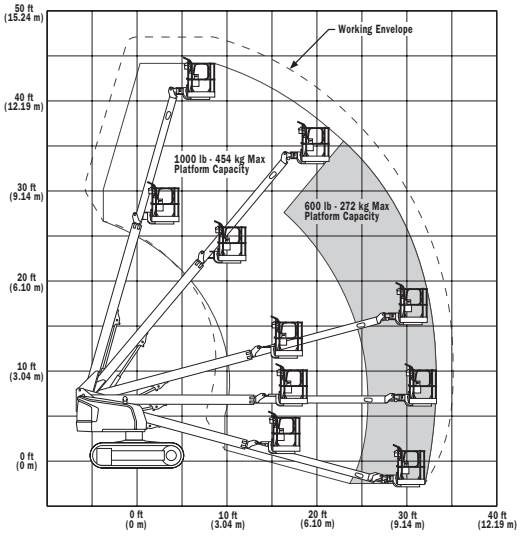

460SJC

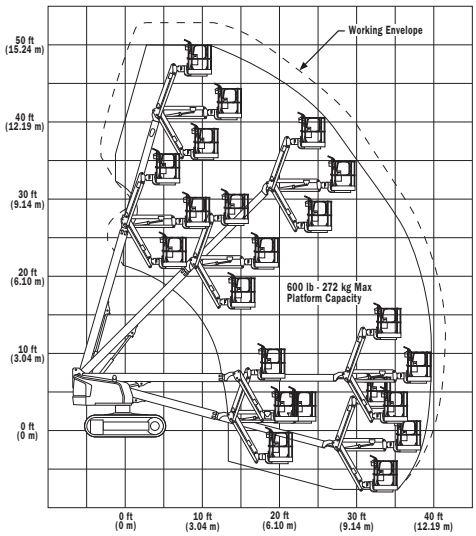

The JLG "1 & 5" Warranty

We provide coverage for one (1) full year, and cover all specified major structural components for five (5) years. Due to continuous product improvements, we reserve the right to make specification and/or equipment changes without prior notification. This machine meets or exceeds applicable ANSI and CSA requirements based on machine configuration as originally manufactured for intended applications. Please reference the serial number plate on the machine for additional information.

ALLE AFMETINGEN EN DOORRIJHOOGTES ZIJN STEEDS OP AANVRAAG, ONGEACHT DE VERMELDE AFMETINGEN IN DEZE TECHNISCHE FICHE

HERMANS HEFTRUCKS